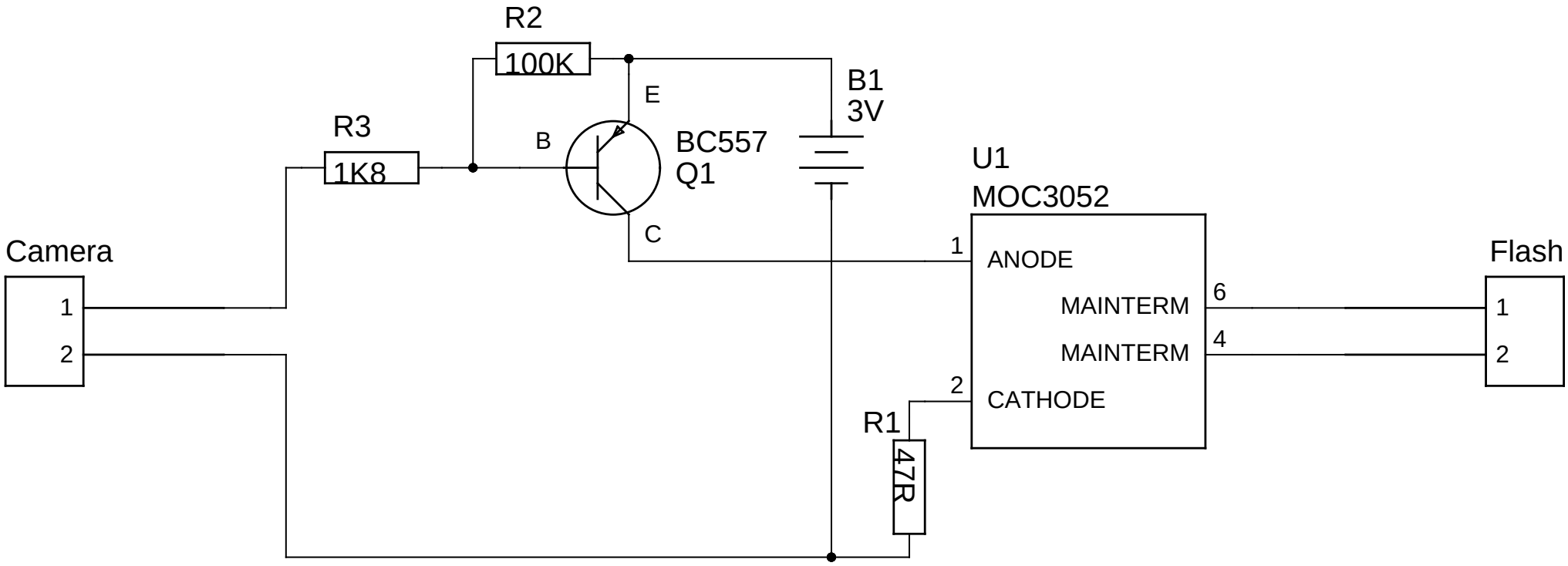
R2
100K
E
B1
3V
R3
1K8
B
BC557
Q1
U1
MOC3052
C
Camera
1
2
1
ANODE
Flash
MAINTERM
6
1
MAINTERM
4
2
2
CATHODE
R1
47R